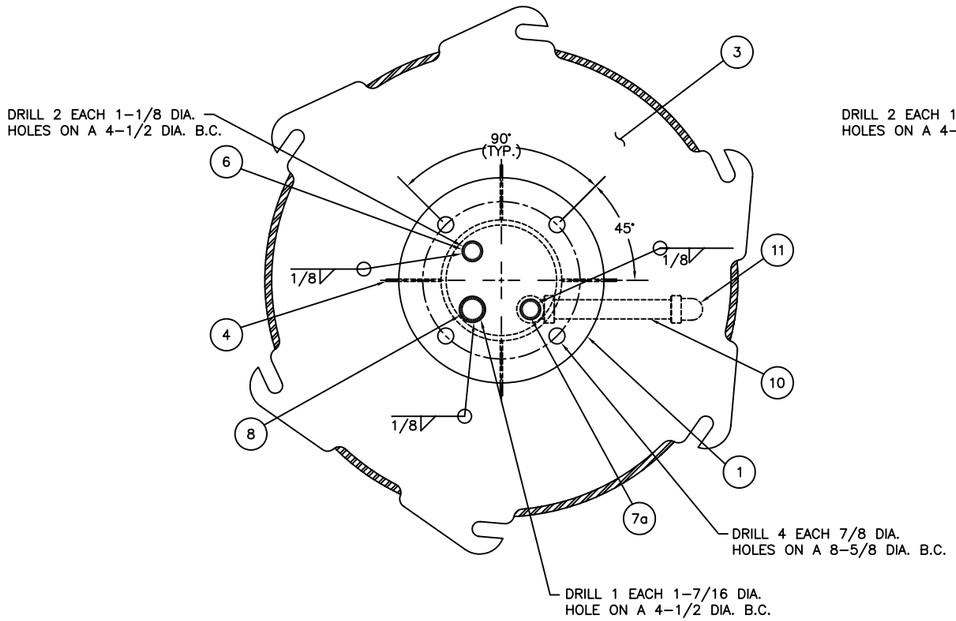

TOP VIEW

(ITEM 5 NOT SHOWN FOR CLARITY)

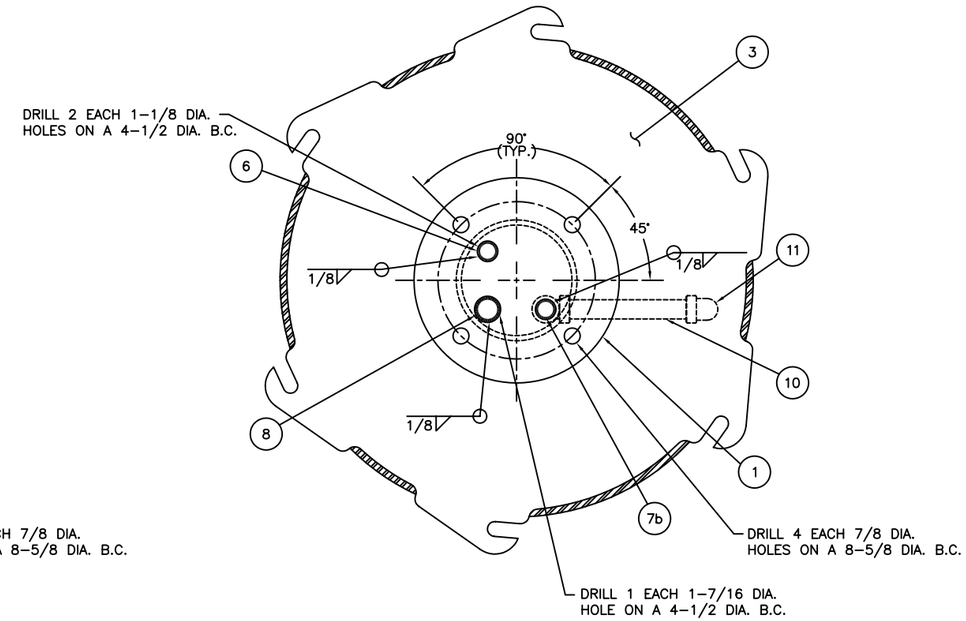

TOP VIEW

(ITEM 5 NOT SHOWN FOR CLARITY)

ITEM NO.	5x11 NO. NO.	3.5x8 NO. REQ.	BILL OF MATERIALS DESCRIPTION	MATL.	REMARKS
1	1	1	RADAR REF. SUPPORT PLATE	STAIN. STEEL	11–1/4 DIA. x 3/8 THK.
2	1	1	RADAR REF. SUPPORT PIPE	STEEL	6 IPS SCH. 40
3	1	1	24" POCKET COVER	STEEL	SEE DRAWING 121143
4	4	–	PIPE GUSSETS	STEEL	1/8 THK.
5	2	2	UNION	STAIN. STEEL	3/4 NPT
6	1	1	NIPPLE	STAIN. STEEL	3/4 SCH. 40 x 8 LG.
7a	1	–	VENT PIPE	STAIN. STEEL	3/4 SCH. 40 x 30 LG.
7b	–	1	VENT PIPE	STAIN. STEEL	3/4 SCH. 40 x 15–1/2 LG.
8	1	1	HALF COUPLING	STAIN. STEEL	3/4 NPT
9	1	1	90° ELBOW (THREADED)	STAIN. STEEL	3/4 NPT
10	1	1	NIPPLE	STAIN. STEEL	3/4 SCH. 40 x 7–1/2 LG.
11	1	1	90° STRRET ELBOW	STAIN. STEEL	3/4 NPT

NOTES:

1. SEE LATEST REVISION OF U.S.C.G. CIVIL ENGINEERING SPECIFICATION NO. 484 FOR FABRICATION REQUIREMENTS.

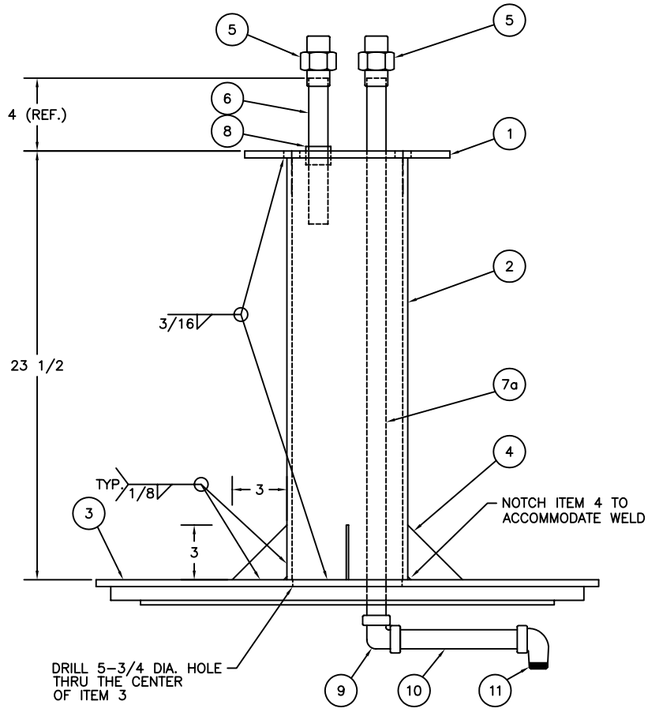

5x11 POCKET COVER

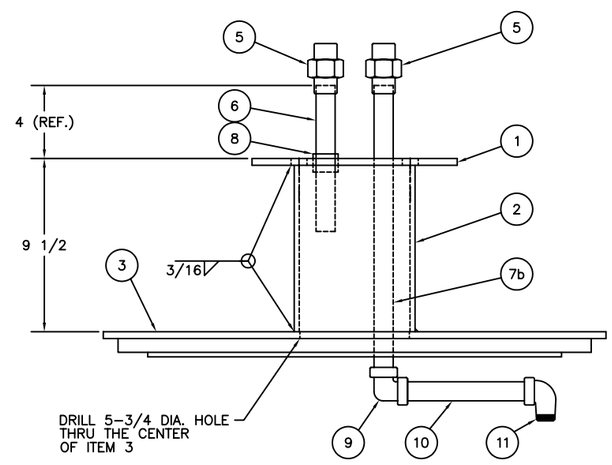

3–1/2x8 POCKET COVER

REV.	DATE	APPR.	DESCRIPTION	BY
C	3–14 –00	W.D.	MODIFIED THREADS FOR ITEMS 5, 8, 9, & 11.	S.M.
B	12–8 –99	W.D.	MODIFIED REMARKS FOR ITEM 4.	S.M.
A	5–12 95	SW	MODIFIED WELD SYMBOLS	CB

DESIGNED: S.M.
DRAWN: S.M.
TRACED:
CHECKED:
REVIEWED BY: S. McEvoy
PROJECT ENGINEER
REVIEWED BY: S. D. Walker
G–SEC–2B
REVIEWED BY:
G–SEC–2

U.S. COAST GUARD HEADQUARTERS

CIVIL ENGINEERING

5x11LR
AND 3–1/2x8LR
POCKET COVERS

APPROVED: L. E. Jaeger
CHIEF, OFFICE OF CIVIL ENGINEERING

DATE 4/26/94

UNLESS OTHERWISE SPECIFIED:
ALL DIMENSIONS ARE IN INCHES.
TOLERANCES: DIM. ±1/8
ANG. ±1°

DRAWING NUMBER 121160 REV. C

SCALE: 3"=1'–0" SHEET 1 OF 1

PLOTTING SCALE: 3"=1'–0"